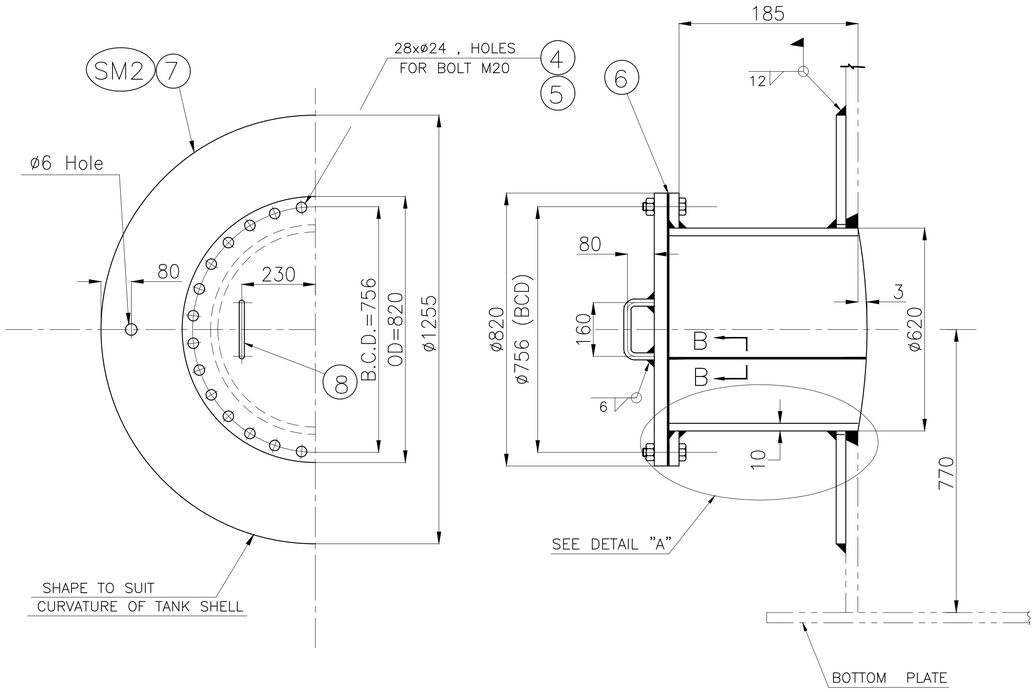

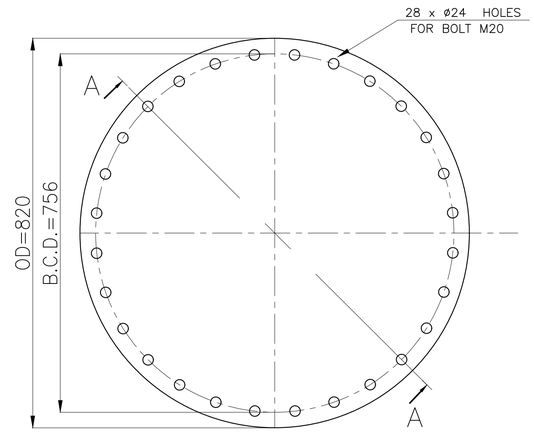

3 COVER PLATE
THK.=16

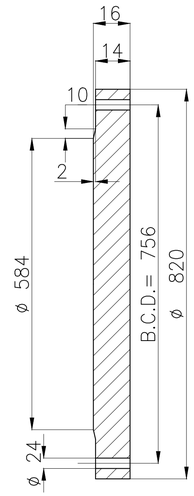

SEC. A–A

NO.	DESCRIPTION	MATERIAL	DIMENSIONS	NO.OF 1 SET	WEIGTH KG 1 PIECE	WEIGTH KG 1 SET	REMARK
1	MANHOLE NECK	RST37–2	PL. 10x202x1922	1	30.5	30.5	
2	FLANGE	RST37–2	PL. ø820xø624x20THK.	1	22	22	
3	COVER PLATE	RST37–2	ø 820 x 16Thk.	1	66.5	66.5	
4	BOLT	8.8	M20 x 100 Lg.	28	0.25	7	DIN933
5	NUT	8	M20	28	---	---	DIN934
6	GASKET	RCAF	ø735 x ø 600 x 3t	1+1	---	---	
7	REINF. PLATE	RST37–2	PL. ø1255 /625x12Thk.	1	148	148	
8	HANDLE	St37	RB ø 10 x 340 Lg.	2	0.2	0.4	

TOTAL WEIGHT=274.44 Kg

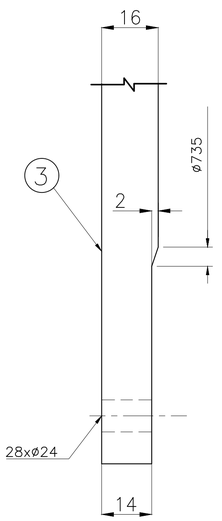

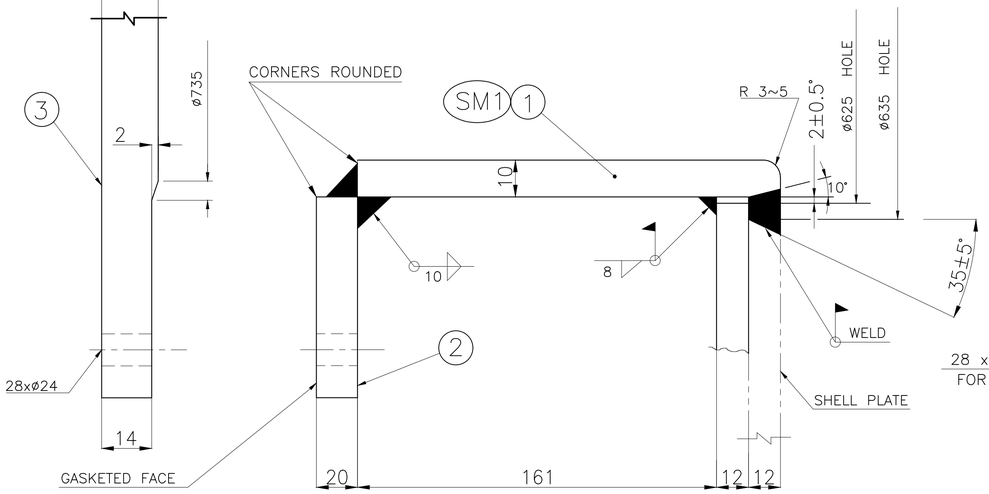

DETAIL "A"

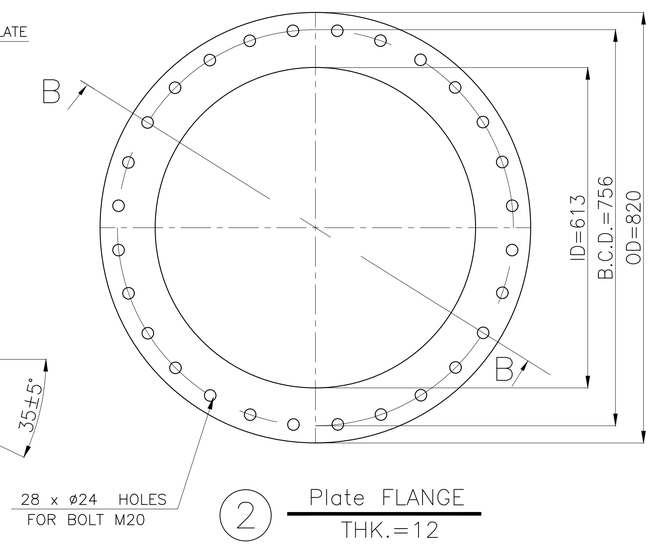

2 Plate FLANGE
THK.=12

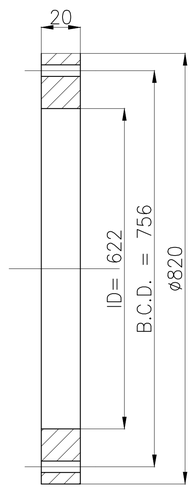

SEC. B–B

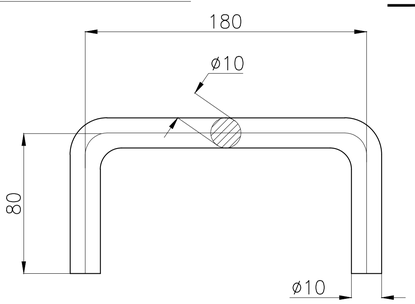

8 HANDLE DETAIL

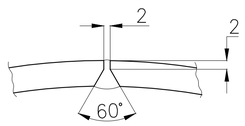

SECTION B–B

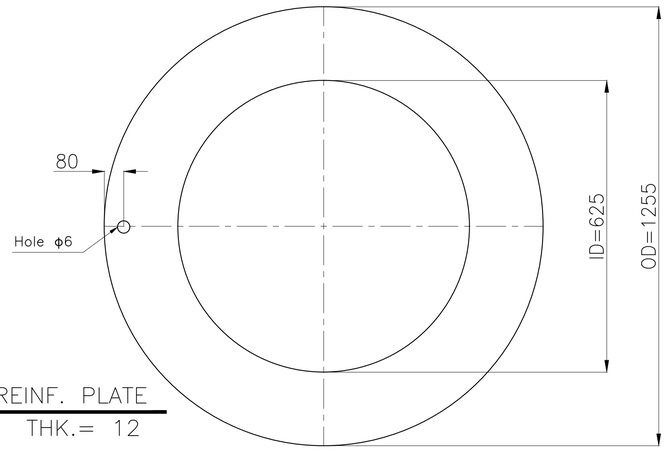

7 REINF. PLATE
THK.= 12

Drawing Title: New Heavy Fuel Oil Storage Tank M1 24" SHELL MANHOLE		Customer: Nahavand Cement Co.	
		Drawing No. 1.344.U0.821.01.17	Rev. 0 / Page 1 / Pages 1
1401	Date	Signature	Rev. / Description / By / Date
Designed	08/10		
Drawn	08/10		
Checked	08/10		
Approved	08/10		
Project No.	Scale 1:75	File Name	Disk No.