NO.	DESCRIPTION	MATERIAL	DIMENSIONS	NO.OF 1 SET	WEIGHT Kg 1PIECE	WEIGHT Kg 1 SET	REMARKS
1	REIN. PLATE	ST37-2	PL. 315x220x12	1	6.53	6.35	
2	TOP PLATE	ST37-2	PL. 160x150x20	1	3.76	3.76	
3	RIB PLATE	ST37-2	PL. 260x160x16	2	5.2	10.4	
4	ROUND BAR	ST-37	R.B. ø30 L=700	1	4.4	4.4	
5	NUTS	GRADE 8	M30	2	0.223	0.446	DIN 934
6	ROUND BAR	ST-37	R.B. ø30 L=100	1	.65	.65	
7	WASHER	ST	D32	1	~	~	DIN 125

TOTAL WEIGHT = 24x26=624.14 Kg

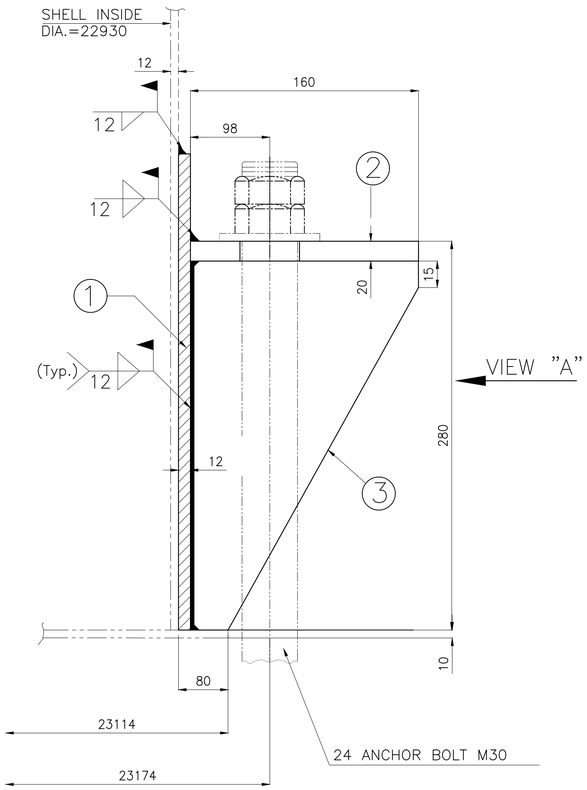

SECTION A-A

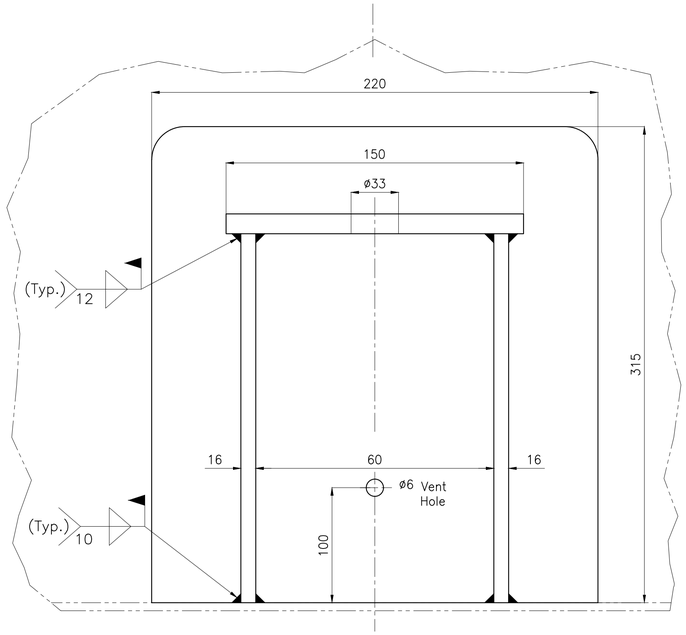

VIEW "A"

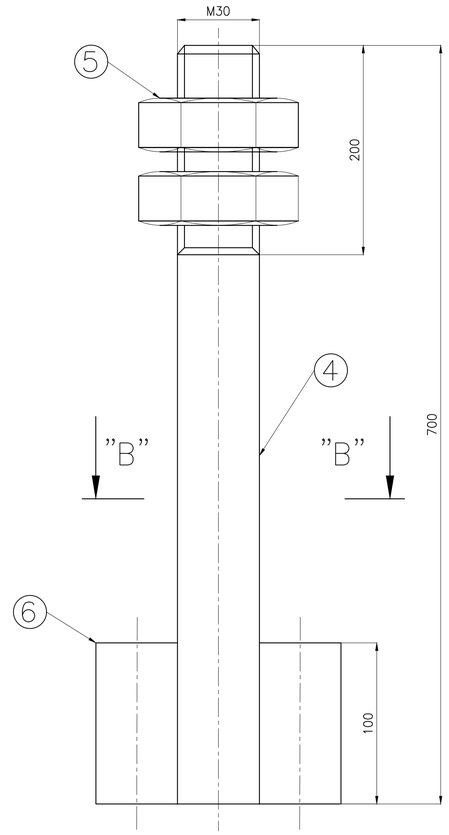

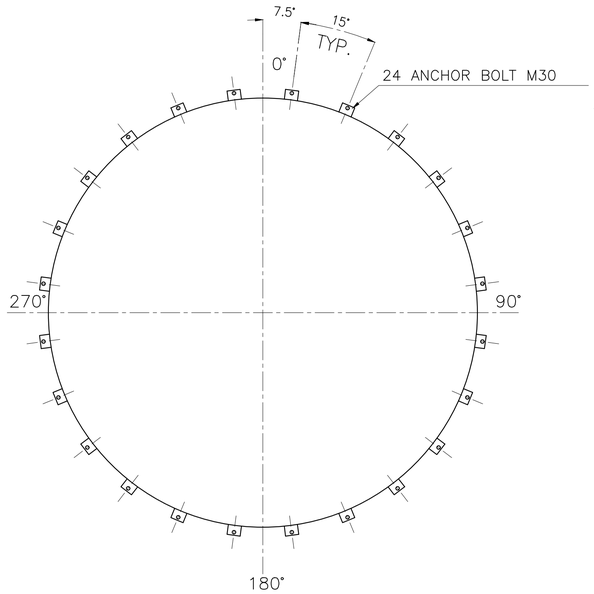

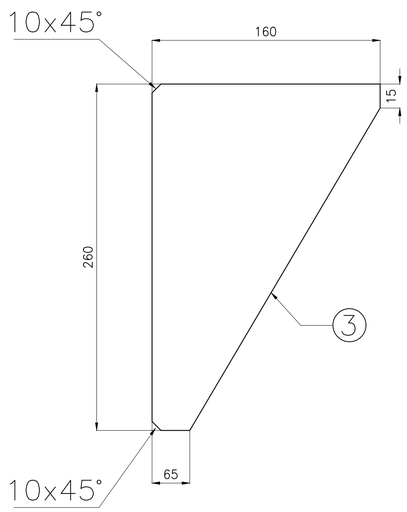

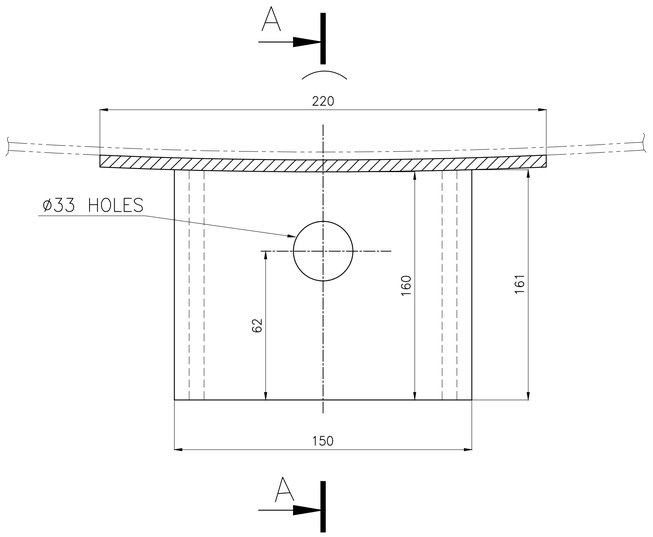

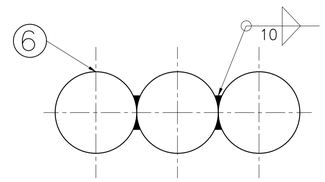

SECTION "B"-"B"

Drawing Title: New Heavy Fuel Oil Storage Tank Anchor Chair	Customer: Nahavand Cement Co.		
	Drawing No. 1.344.UO.821.01.15	Rev. 0	Page 1 / Pages 1

1401	Date	Signature	Rev.	Description	By	Date
Designed	08/10					
Drawn	08/10					
Checked	08/10					
Approved	08/10					
Project No.	Scale 1:75	File Name	Disk No.			