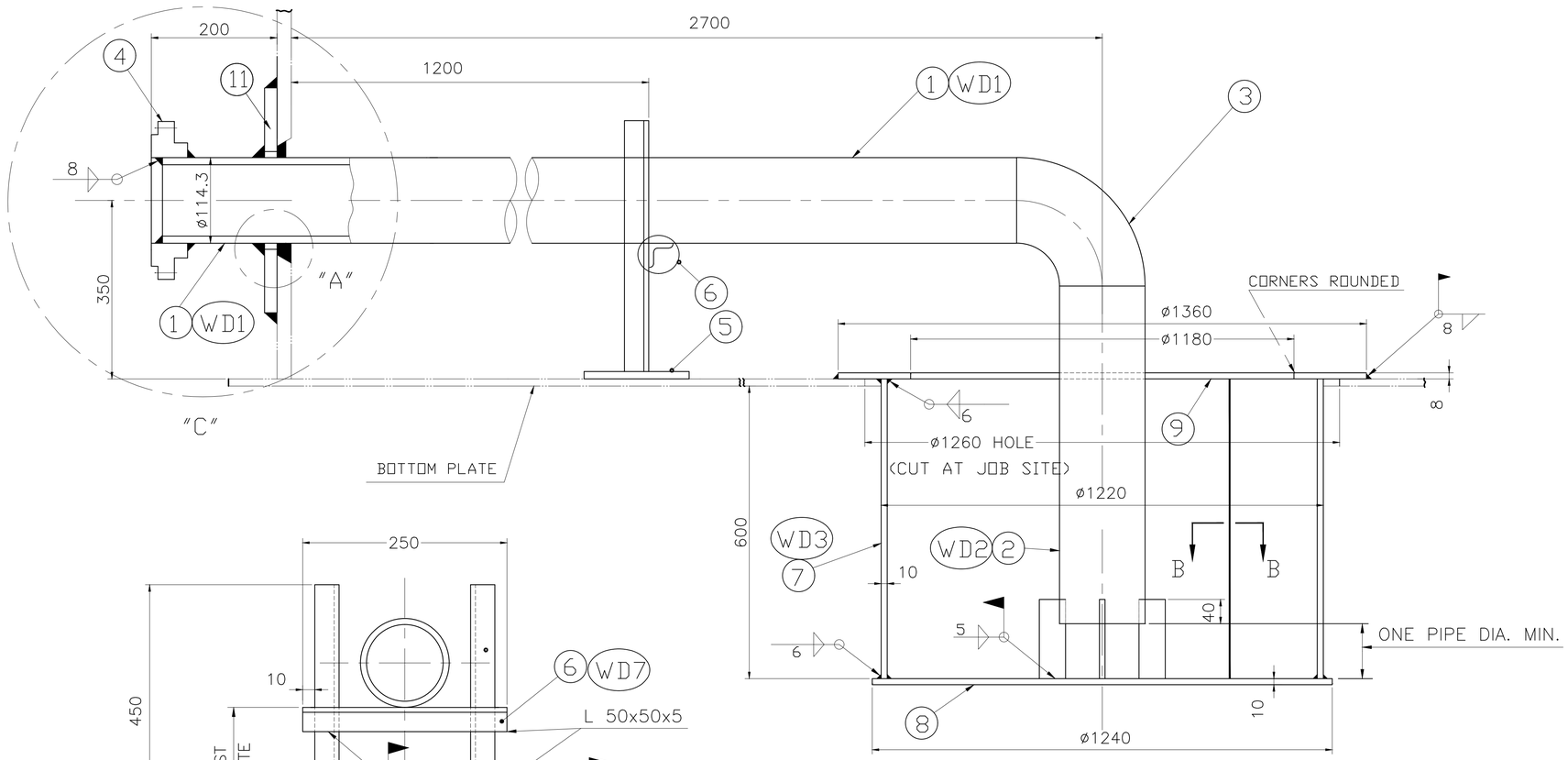

NO.	DESCRIPTION	MATERIAL	DIMENSIONS	NO.OF 1 SET	WEIGHT Kg 1PIECE	WEIGHT Kg 1 SET	REMARKS
1	PIPE	A106-B	4"sch.40x2761 lg.	1	61.5	61.5	
2	PIPE	A106-B	4"sch.40x700 lg.	1	15.6	15.6	
3	4" ELBOW	A234-WPB	90° L.R. SCH 40	1	6.2	6.2	
4	FLANGE	A105	4"ANSI #150 R.F S.O	1	5.5	5.5	
5	PLATE	RST37-2	PL. 6x□ 150	2	1	2	
6	ANGLE	DIN1028	L 50x50x5x250	1	0.9	0.9	
7	SUMP	RST37-2	PL. 10x608x3600	1	181.3	181.3	
8	SUMP	RST37-2	PL. 10xø1240	1	94.8	94.8	
9	SUMP	RST37-2	PL.10xø1360ø1180	1	28.2	28.2	
10	SUPPORT	St37-2	FLAT 50x5x L=150	3	0.25	0.75	
11	REINF. PLATE	RST37-2	PL. 12x ø305	1	8.6	8.6	
12	ANGLE	DIN1028	L 50x50x5x444	2	1.7	3.4	

TOTAL WEIGHT: 408.75 Kg

NOTE:

(1)- WD1 .... WD8 ARE ERECTION MARKS.

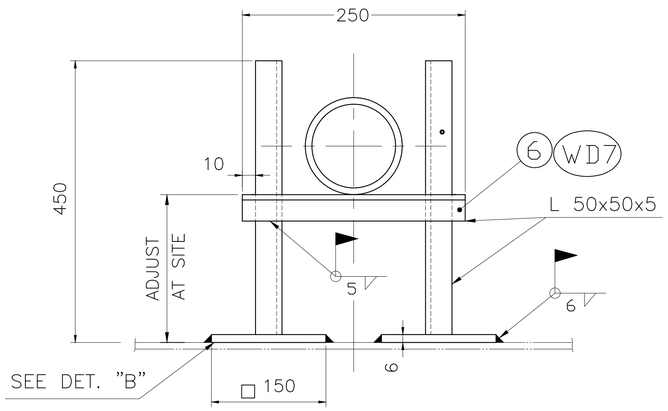

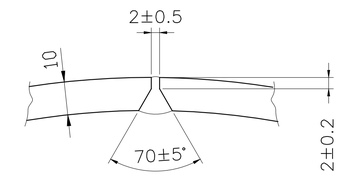

SECTION B-B

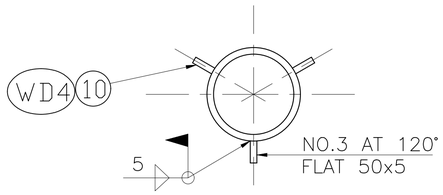

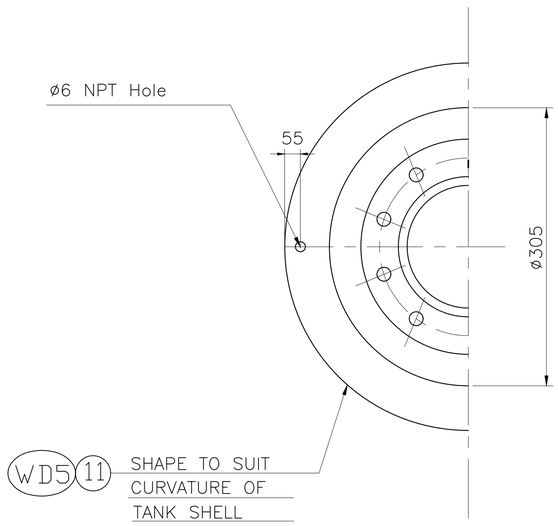

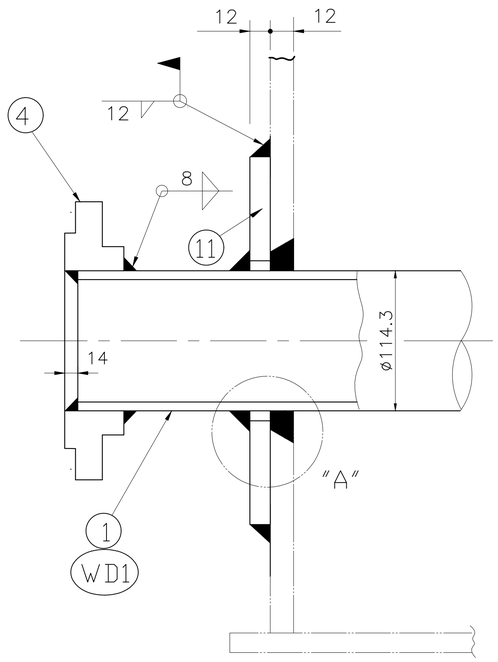

DETAIL "C"

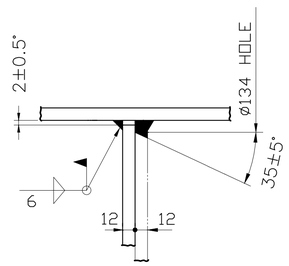

DETAIL"A"

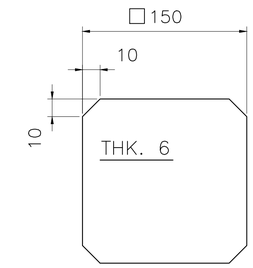

WD8 5 DETAIL"B"

Drawing Title: New Heavy Fuel Oil Storage Tank N7-4" Sump Nozzle	Customer: Nahavand Cement Co.		
	Drawing No. 1.344.U0.821.01.13	Rev. 0	Page 1 / Pages 1
1401	Date	Signature	Description	By	Date
Designed	08/10				
Drawn	08/10				
Checked	08/10				
Approved	08/10				
Project No.	Scale 1:75	File Name	Disk No.		