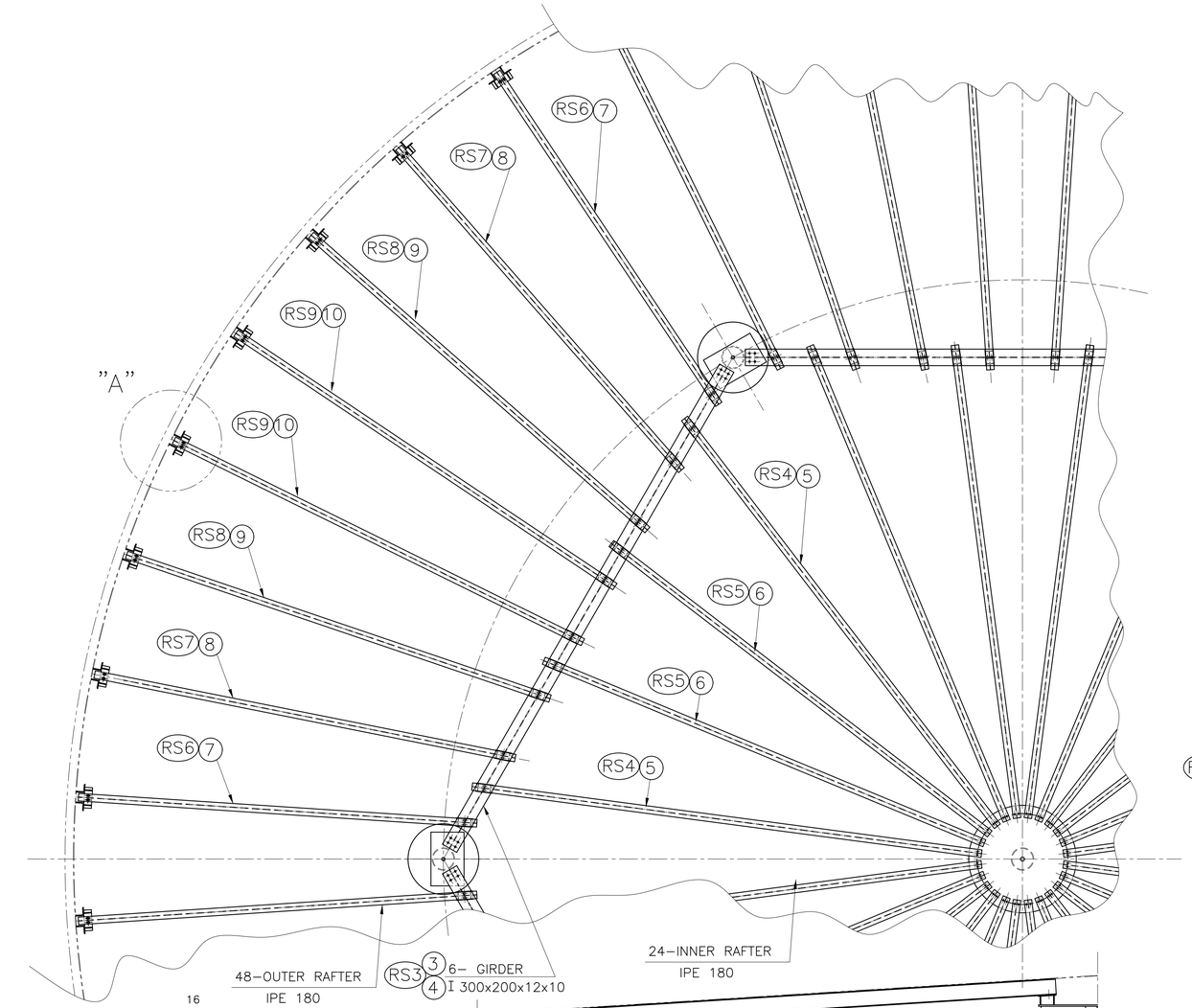

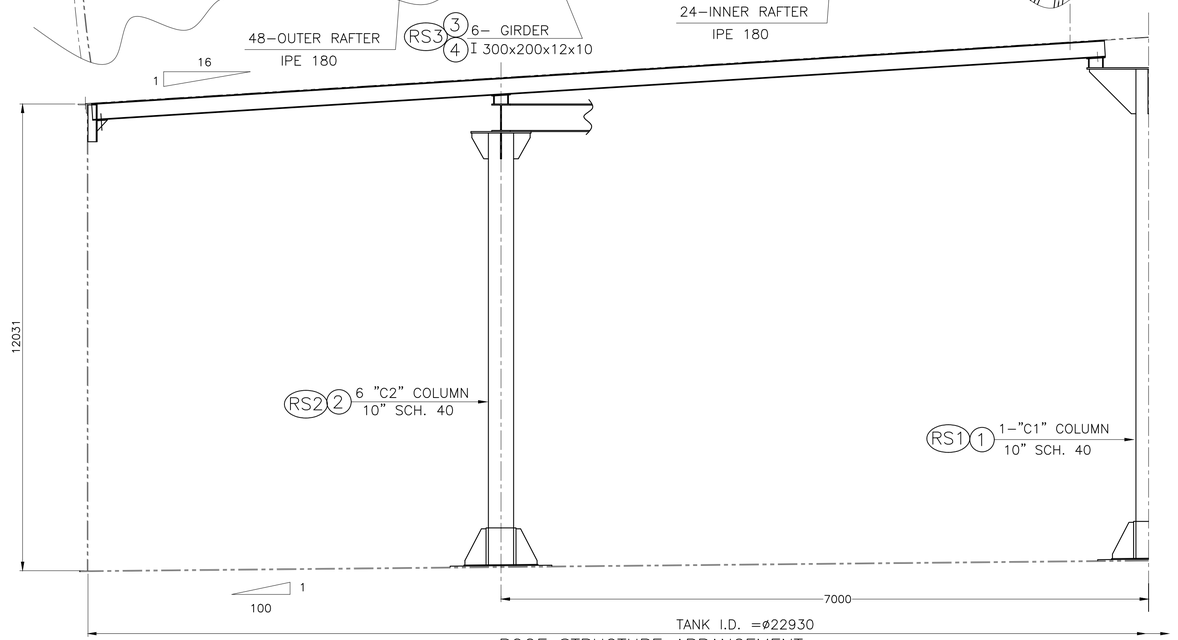

ROOF STRUCTURE ARRANGEMENT

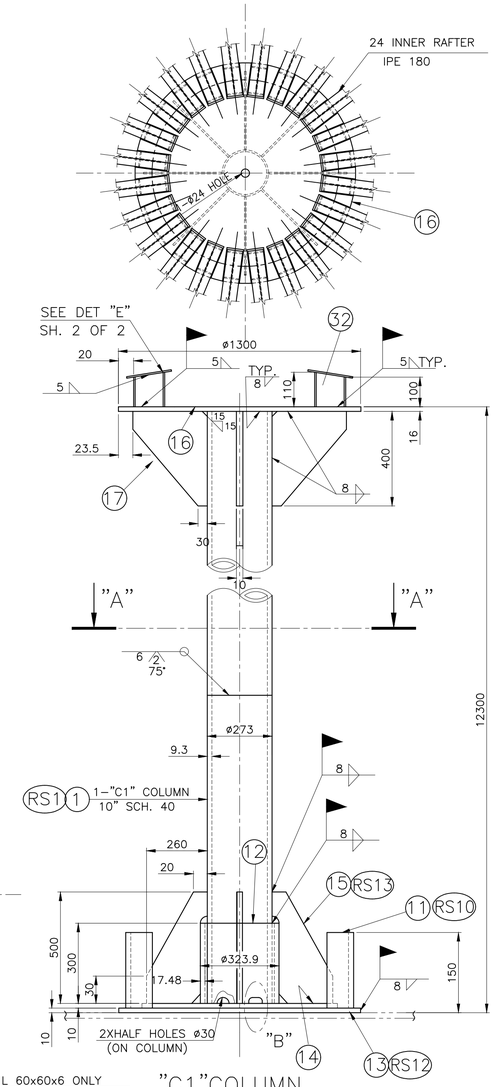

"C1"COLUMN

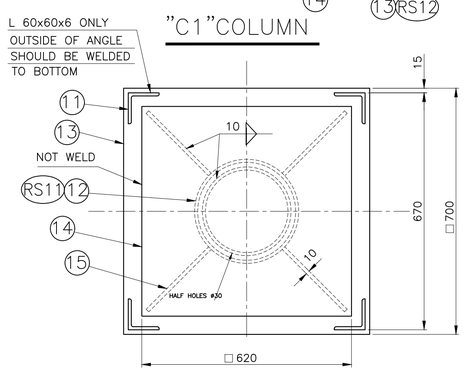

SECTION "A"-"A"

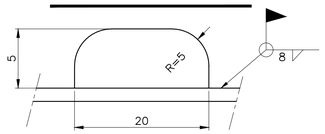

DETAIL "B"

NO.	DESCRIPTION	MATERIAL	DIMENSIONS	NO.OF 1 SET	WEIGHT Kg 1PIECE	WEIGHT Kg 1 SET	REMARKS
1	COLUMN	A-53Gr.B	10"SCH.40 L=12264	1	738.5	738.5	
2	COLUMN	A-53Gr.B	10"SCH.40 L=11620	6	701.3	4207.8	
3	PLATE OF GIRDER	St37-2	PL 12x200x6800	12	128	1536	
4	PLATE OF GIRDER	St37-2	PL 10x300x6800	6	160.14	960.84	
5	INNER RAFTER	DIN1025	IPE 180 L=6223	12	116	1392	
6	INNER RAFTER	DIN1025	IPE 180 L=5775	12	107.6	1291.2	
7	OUTER RAFTER	DIN1025	IPE 180 L=4729	12	89	1068	
8	OUTER RAFTER	DIN1025	IPE 180 L=5123	12	96.3	1152	
9	OUTER RAFTER	DIN1025	IPE 180 L=5344	12	100.5	1206	
10	OUTER RAFTER	DIN1025	IPE 180 L=5450.5	12	102.5	1230	
11	SUPPORT	DIN1028	L 60x60x6x140	28	0.76	21.3	
12	SLEEVE	A-53Gr.B	12" SCH.80 L=300	7	39.6	277.2	
13	BASE PLATE	RST37-2	PL. 10x700x700	7	38.5	269	
14	SLIDING PLATE	RST37-2	PL. 10x620x620	7	30	210	
15	RIB PLATE	RST37-2	PL. 10x260x500	28	10	280	
16	TOP PLATE	St37-2	PL. 16x ø1300	1	166.7	166.7	
17	RIB PLATE	St37-2	PL. 10x400x500	4	14	56	
18	TOP PLATE	St37-2	PL. 16x ø800	6	63	378	
19	RIB PLATE	St37-2	PL. 10x200x300	24	4.7	112.8	
20	BASE PLATE	St37-2	PL. 10x350x890	6	24.5	147	
21	GIRDER CLIP	DIN1025	IPE 160 L=100	12	1.58	19	
22	GIRDER CLIP	DIN1025	IPE 160 L=127.4	12	2	24	
23	GIRDER CLIP	DIN1025	IPE 160 L=137.4	12	2.17	26	
24	GIRDER CLIP	DIN1025	IPE 160 L=151	12	2.38	28.62	
25	GIRDER CLIP	DIN1025	IPE 160 L=155.3	12	2.45	29.44	
26	GIRDER CLIP	DIN1025	IPE 160 L=157.8	12	2.49	29.92	
27	BASE PLATE	St37-2	PL. 10x100x200	96	1.57	150.7	
28	ANGLE	DIN1028	L 100x100x10 L=400	96	6	576	
29	PLATE	St37-2	PL. 10x100x100	48	0.7	33.6	
30	PLATE	St37-2	PL. 16x100x250	48	3.14	150.7	
31	BOLT & NUT	8.8/8	M16 L=60	336	--	20	DIN933 DIN934
32	GIRDER CLIP	DIN1025	IPE 160 L=110	24	1.73	41.7	

TOTAL WEIGHT: 17644.6 KG

NOTE:

(1)- RS1 , RS16 ARE ERECTION MARKS.

Drawing Title
New Heavy Fuel Oil Storage Tank
Roof Structure 1/2

Customer
Nahavand Cement Co.

Drawing No. 1.344.U0.821.01.08
Rev. 0
Page 1
Pages 1

1401	Date	Signature	Rev.	Description	By	Date
Designed	08/10					
Drawn	08/10					
Checked	08/10					
Approved	08/10					

Project No.
Scale 1:75
File Name
Disk No.