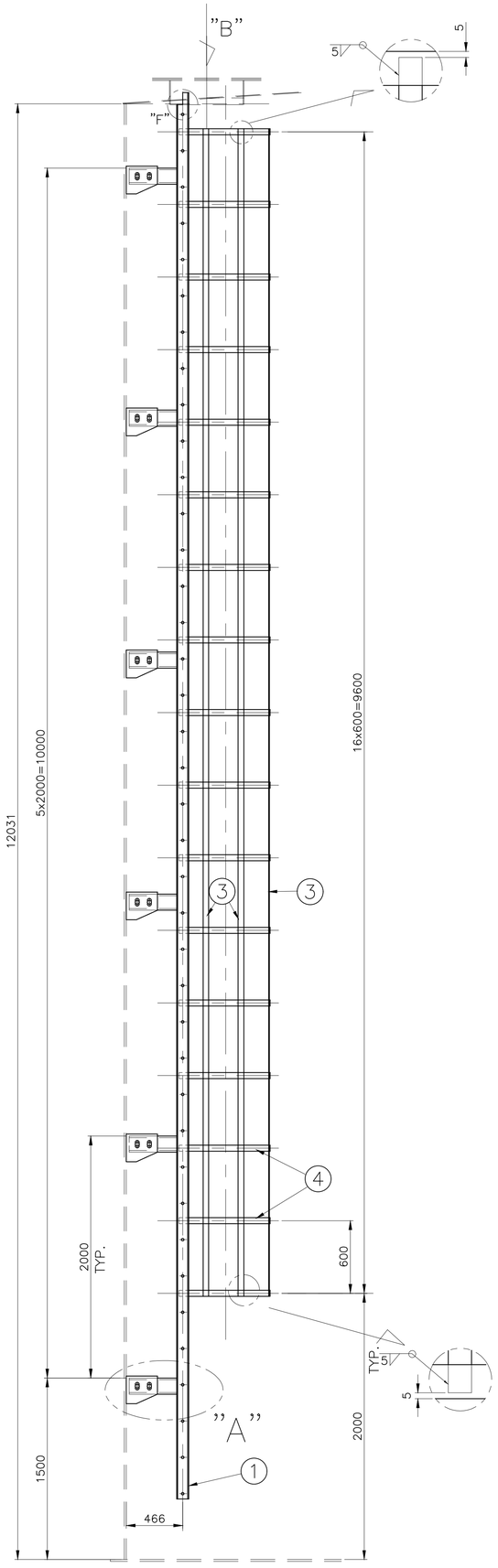

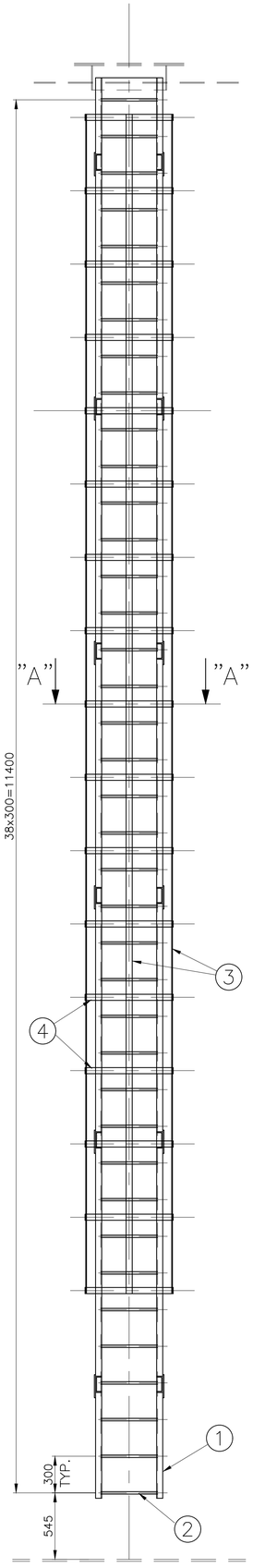

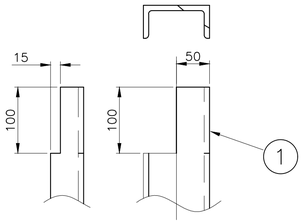

DET. "F"

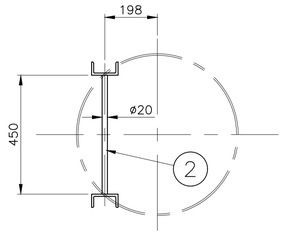

VIEW. "B"

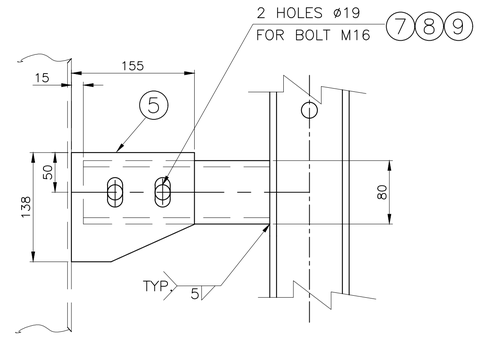

DET. "A"

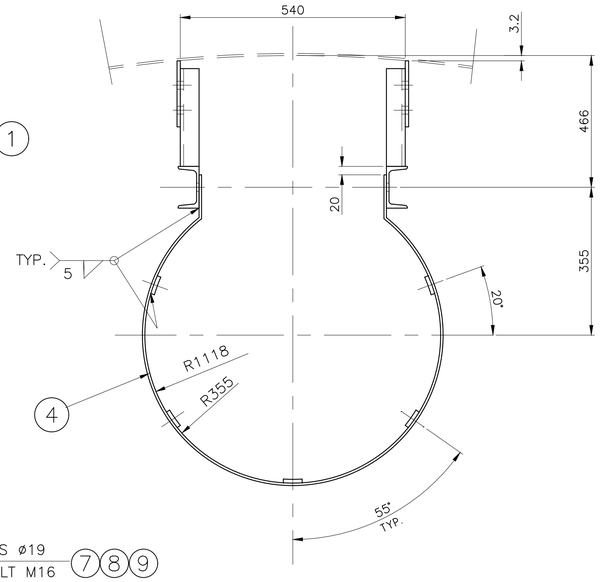

SECTION "A"–"A"

NO.	DESCRIPTION	MATERIAL	DIMENSIONS	NO. OF 1 SET	WEIGHT Kg 1 PIECE	WEIGHT Kg 1 SET	REMARKS
1	SIDE RAIL	DIN1026	UNP 100, L=11625	2	123.2	246.4	
2	RUNG	ST 37–2	R.B. ø20xL=456	39	1.1	43	
3	CAGE VER.BAR	ST 37–2	FL. 50x6xL=9640	5	22.7	113.5	
4	HOOP	ST 37–2	FL. 50x6xL=1979	17	4.6	78.2	
5	LUG	ST 37–2	PL. 158X138X8	12	1.3	15.6	
6	LUG	DIN1026	UNP 80, L=413	12	3.5	42	
7	HEX. BOLT	8.8	M16X50	24	–	–	DIN933
8	NUT	8	M16	24	–	–	DIN934
9	WASHER	St	D17	48	–	–	DIN125

TOTAL WEIGHT =538.7 Kg

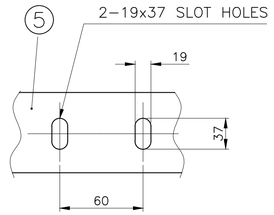

VIEW "G"

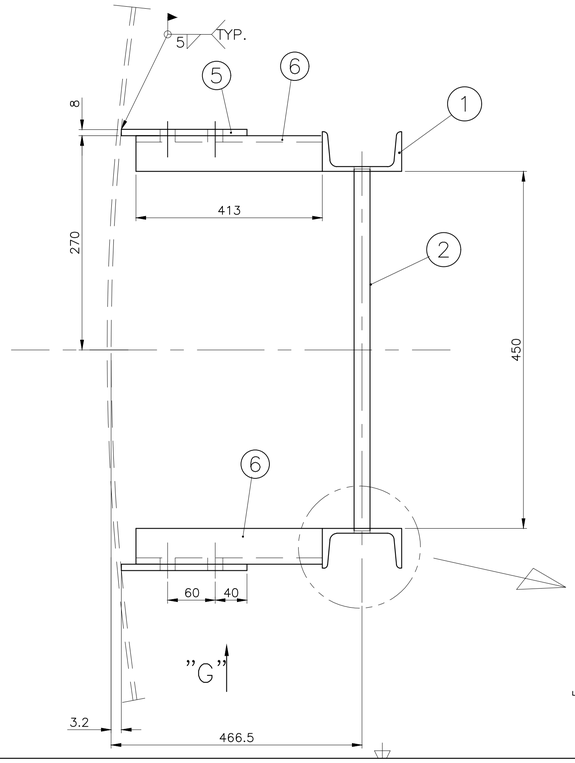

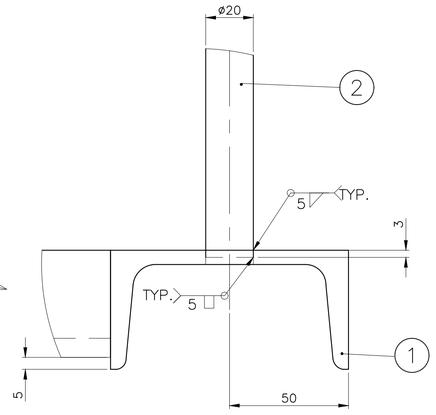

Drawing Title: New Heavy Fuel Oil Storage Tank Internal Ladder		Customer: Nahavand Cement Co.	
		Drawing No. 1.344.U0.821.01.12	Rev. 0 / Page 1 / Pages 1
1401	Date	Signature	Rev.	Description	By	Date
Designed	08/10					
Drawn	08/10					
Checked	08/10					
Approved	08/10					
Project No.	Scale 1:75	File Name	Disk No.			