NO.	DESCRIPTION	MATERIAL	DIMENSIONS	NO.OF 1 SET	WEIGHT Kg 1PIECE	WEIGHT Kg 1 SET	REMARKS
1	ROOF PLATE	RST37-2	PL. 6x1500x6000	49	424	20776	

TOTAL WEIGHT: 20776 KG

NOTE:

(1)- RP1 IS ERECTION MARK.

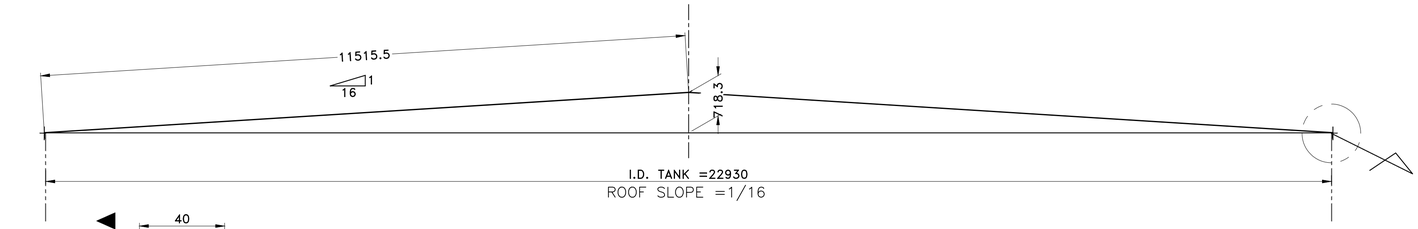

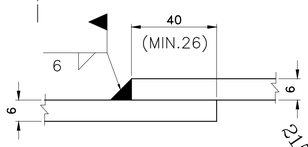

SECTION "B"-"B"

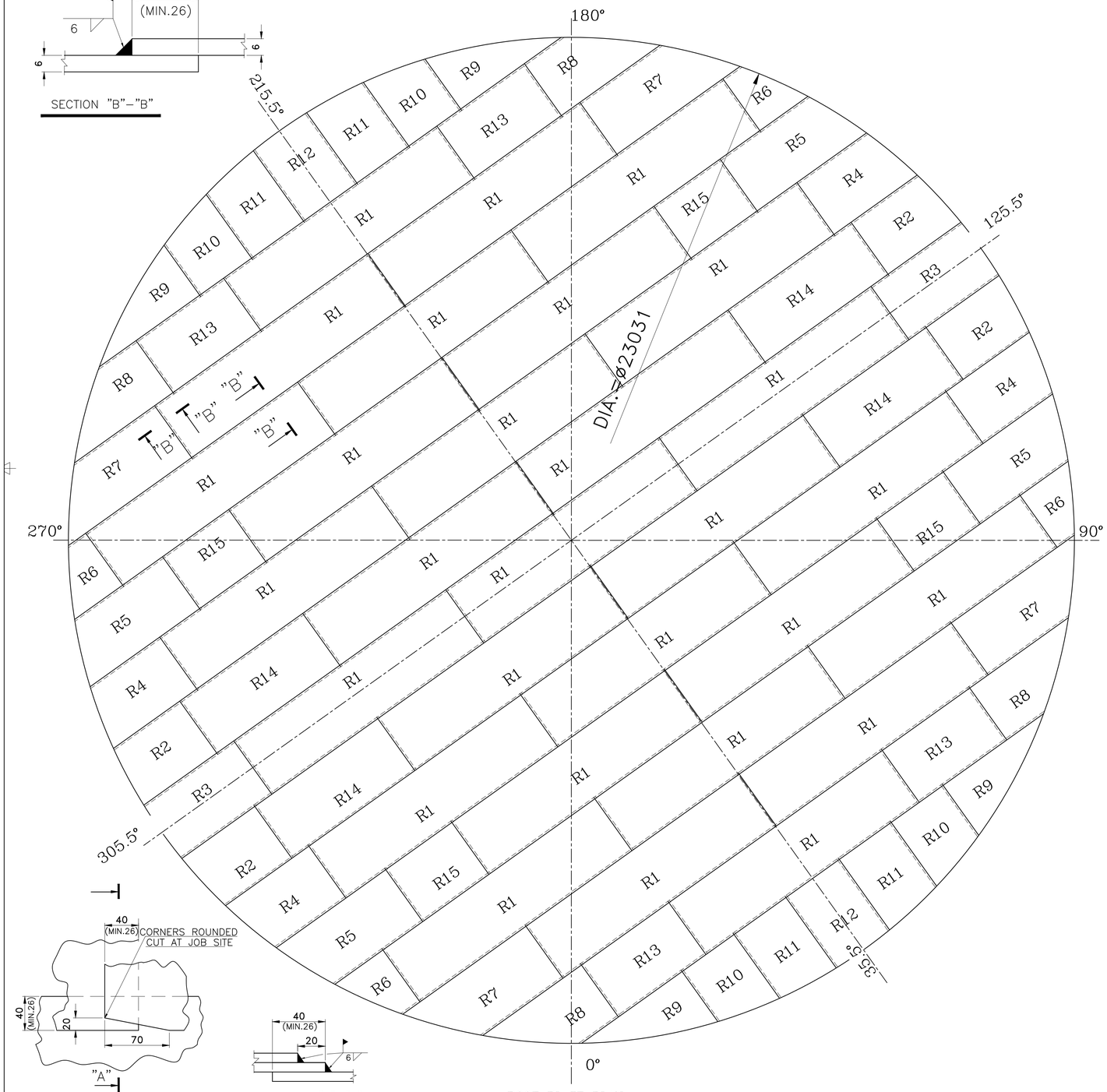

ROOF PLATE PLAN

DETAIL OF THREE LAP JOINT

SECTION "A"-"A"

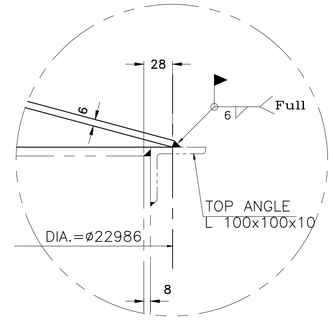

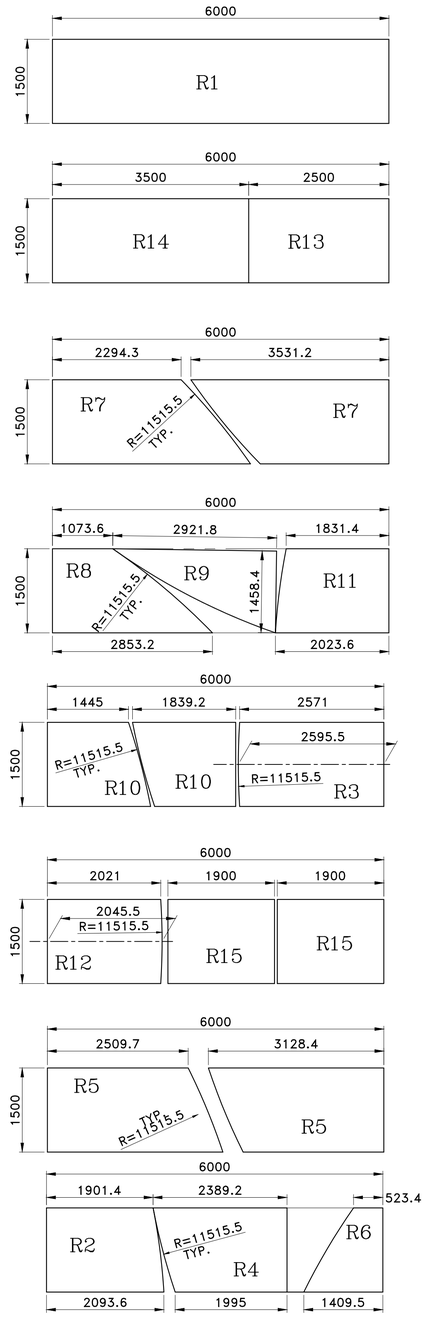

RP1 (1) CUTTING PLAN

MARK	QUANT.
R1	29
R13+R14	4
2(R7)	2
R8+R9+R11	4
R3+2(R10)	2
R12+2(R15)	2
2(R5)	2
R2+R4+R6	4
TOTAL	49

ROOF PLATE

RP1 (1) 49-PL. 6x1500x6000

Drawing Title: New Heavy Fuel Oil Storage Tank Roof Plates Plan

Customer: Nahavand Cement Co.

Drawing No. 1.344.U0.821.01.03 | Rev. 0 | Page 1 | Pages 1

1401	Date	Signature	Rev.	Description	By	Date
Designed	08/10					
Drawn	08/10					
Checked	08/10					
Approved	08/10					

Project No. | Scale 1:75 | File Name | Disk No.